IS BMW 100 v2

Technical Sheet

Midwoofer

SPECIFICATIONS

Nominal power	40W	
Maximum power	80W	
Sensitivity	92.5dB	
Cone	Polyglass	
Nom. impedance	4Ω	
Surround	Butyl	
DC resistance	3.5Ω	
VC diameter	25mm	3/4"
Former	Kapton	
Layers	2	
Wire	Copper	
Net weight	400g	0.88lbs
Frequency response	80 - 23000Hz	
Crossover	6dB/Oct @4kHz	

FREQUENCY RESPONSE/IMPEDANCE

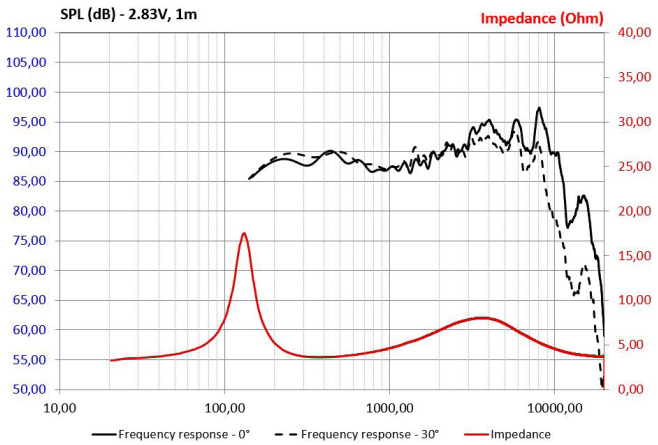

PARAMETERS

Rdc	3.3Ω
Fs	140Hz
Mms	5g
Cms	0.2mm/N
Vas	0.7l
Qts	0.7
Qes	0.77
Qms	6
Bxl	5N/A
Sd	50.7cm²
SPL	91.5dB
Xmax	2mm

MECHANICAL DRAWING (MM)

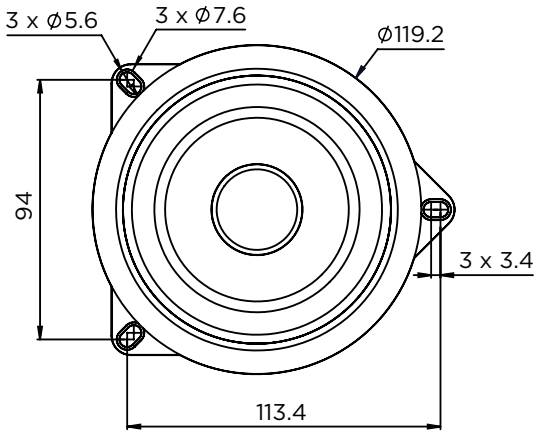

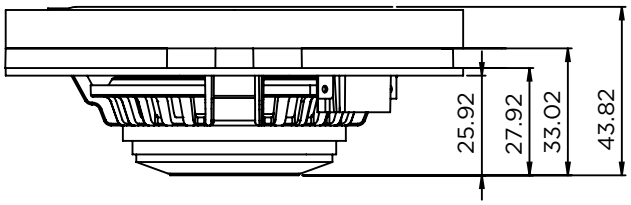

IS BMW 100 v2

Product Sheet

IS BMW 100 v2 is designed to enhance the audio system on board compatible BMW vehicles. True to the Focal Inside DNA, this Plug & Play solution is a two-way component kit developed specifically by our engineers to improve the in-car listening experience. The Focal Inside BMW solution allows users to configure the audio system according to their personal preferences.

Key points

- Developed in France
- Quick and easy to install with no vehicle modifications required
- Seamless integration into the cabin
- Superior sound quality
- Installation video tutorial available at **focal-inside.com** and on Youtube

Check your vehicle's compatibility at **www.focal-inside.com**

Type	2-way component kit
Midrange	4" (100mm)
Depth	1" (26mm)
Voice coil diameter	1" (25mm)
Magnet	Neodymium
Cone	Polyglass
Surround	Butyl
Impedance	4Ω
Maximum power	80W
Nominal power	40W RMS
Sensitivity (2.83V/1m)	92.5dB
Frequency response	80Hz - 23kHz
Crossover	Separate
Tweeter	Aluminium/Magnesium inverted dome tweeter

FOCAL INSIDE

Focal® is a trademark of Focal-JMLab® - www.focal.com - SCCG - 21/08/2024 - v1

FOCAL®