IC BMW 100

Product Data Sheet

IC BMW 100 is designed for drivers who want to replace their original audio system with a quality sound solution adapted to their vehicle. This kit is equipped with the neodymium magnet and the Aluminium/Magnesium inverted dome tweeter, exclusive Focal technologies for high power handling and perfectly rendered trebles.

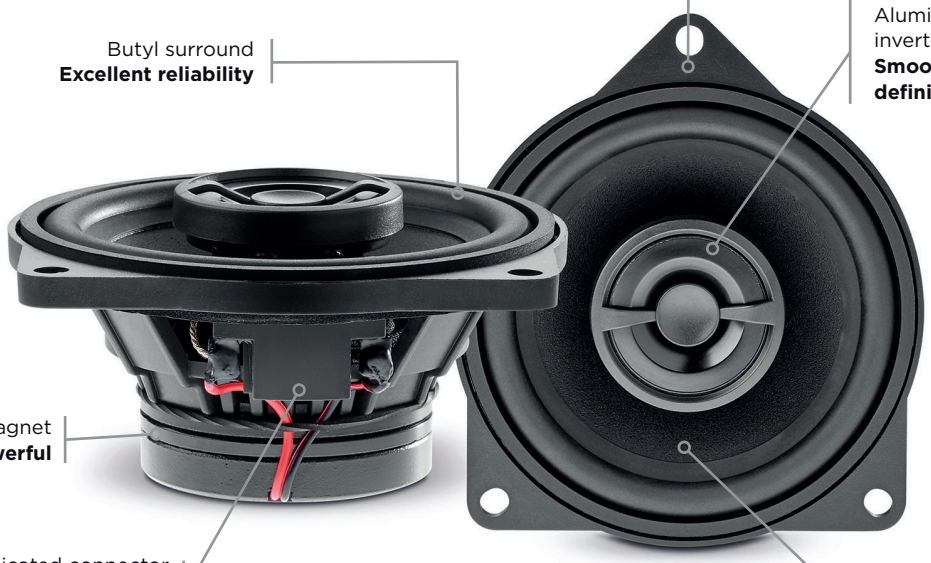

Key Points

- Quick installation
- No wire to cut, no modification
- 100% compatible with your vehicle
- Sound quality superior compared to the original one
- Mounting accessories included

Check your vehicle compatibility at **www.focal-inside.com**

[BMW : Série 1, Série 3, X1, X3...
Mini : R5, R57...]

Type	**2-way coaxial kit**
Woofer	4″ (100mm)
Tweeter	Inverted dome
Magnet	Neodymium
Cone	Black Polyglass
Surround	Butyl
Impedance	4Ω
Max. power	80W
Nom. power	40W RMS
Sensitivity (2.83V/1m)	89.5dB
Frequency response	80Hz-23kHz
Crossover	Integrated

FOCAL® *INSIDE*

Focal® is a trademark of Focal-JMLab® - www.focal.com - SCLC - 17/05/2024 - v2

FOCAL®

IC BMW 100

Technical Sheet

Woofer

SPECIFICATIONS

Nominal power	40 W	
Maximum power	80 W	
Sensitivity	89.5 dB	
Nom. impedance	4 Ω	
Cone	Polyglass	
Surround	Butyl	
DC resistance	3.5 Ω	
VC diameter	25 mm	13⁄16″
Former	Kapton	
Layers	2	
Wire	Copper	
Net weight	400g	0.88lb
Frequency response	80-23000 Hz	
Crossover	6 dB/Oct @4 kHz	

FREQUENCY RESPONSE/IMPEDANCE

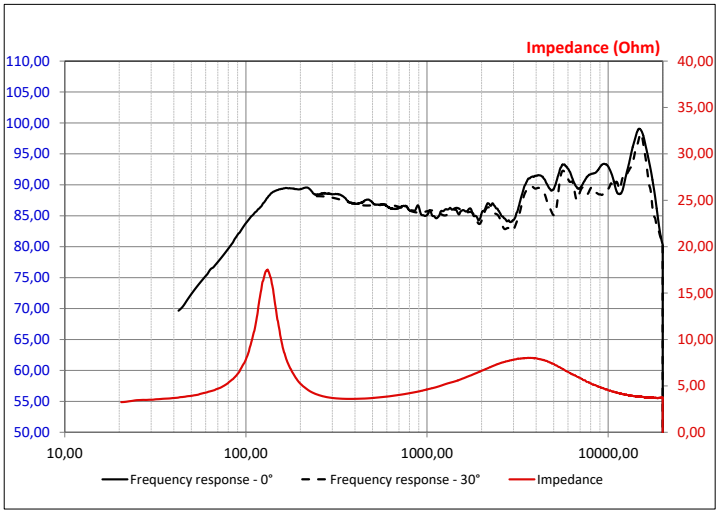

PARAMETERS

Rdc	3.5 Ω
Fs	115 Hz
Mms	4.3 g
Cms	0.4 mm/N
Vas	1.3 l
Qts	1.1
Qes	1.2
Qms	8
Bxl	4 N/A
Sd	50.7 cm^
SPL	89.5 dB
Xmax	2 mm

MECHANICAL DRAWING

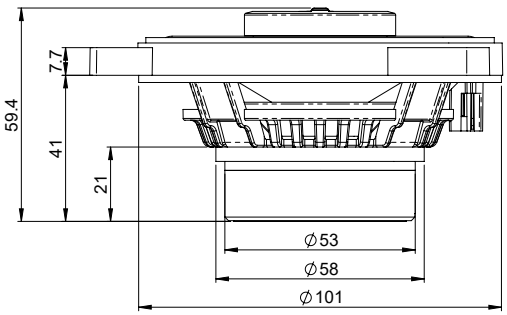

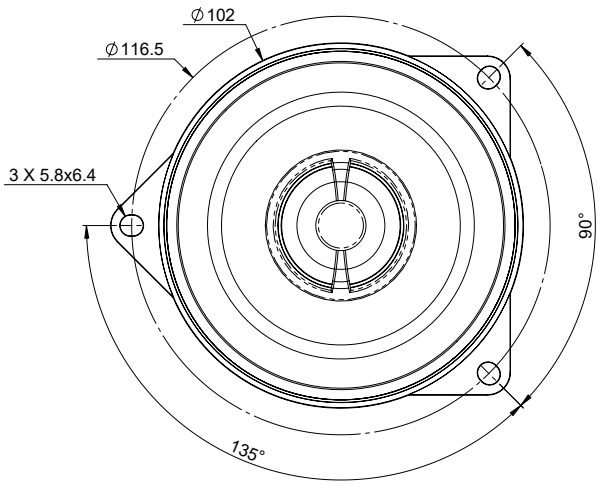

FOCAL INSIDE

Focal® is a trademark of Focal-JMLab® - www.focal.com - SCAA190920/1

FOCAL LISTEN BEYOND